Communication Systems Lecture-8: Differential Coding and Regenerative Repeaters

Chadi Abou-Rjeily

Department of Electrical and Computer Engineering
Lebanese American University
chadi.abourjeily@lau.edu.lb

October 14, 2024

Differential Coding (1)

- When serial data is passed through many circuits along a communication channel, the waveform is often unintentionally inverted.
- To solve this problem, differential encoding is used.
- The encoded differential data are generated by:

$$e_n = d_n \oplus e_{n-1}$$

where:

  - $\{d_n\}$ stand for the input (information) bits.
  - $\{e_n\}$ stand for the encoded (transmitted) bits.
  - $\oplus$ stands for the modulo-2 addition.

- In other words, instead of directly transmitting the information bits, we transmit the difference between the present information bit and the past encoded bit.
  - If these bits are the same, a binary 0 is transmitted.
  - Otherwise, a binary 1 is transmitted.

Differential Coding (2)

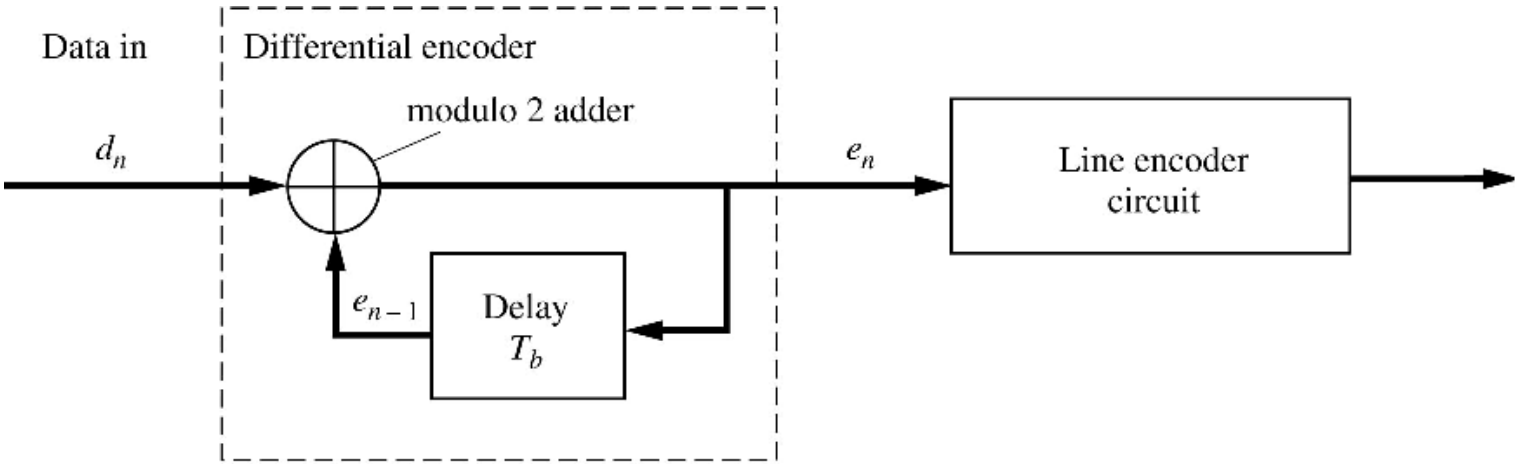

- Transmission is initialized by the transmission of a reference bit (that is known to the receiver).
- An example of differential encoding is shown in the next table (the reference bit is equal to 1):

Input sequence	$\mathbf{d_n}$		1	1	0	1	0	0	1
Encoded sequence	$\mathbf{e_n}$	1	0	1	1	0	0	0	1

Reference bit

Differential Coding (3)

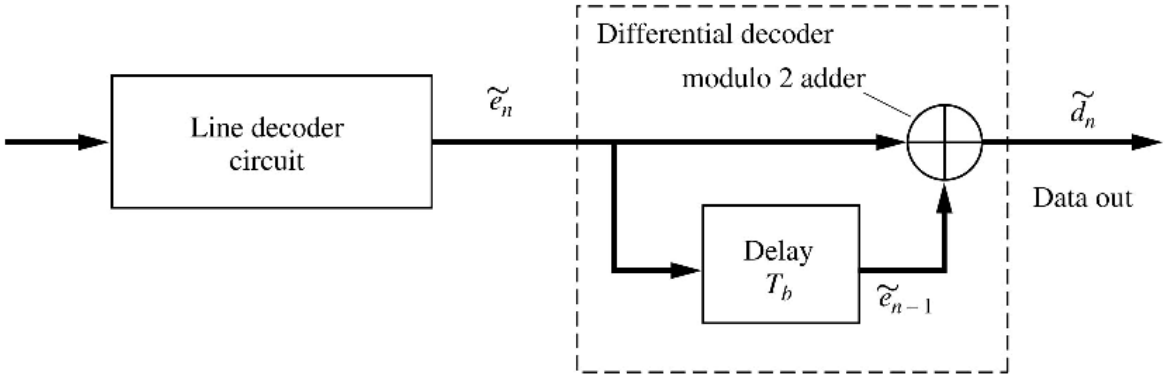

- At the receiver side, the decoding rule is given by:

$$\tilde{d}_n = \tilde{e}_n \oplus \tilde{e}_{n-1}$$

  where:
  - $\{\tilde{e}_n\}$ stand for the received bits.
  - $\{\tilde{d}_n\}$ stand for the decisions taken on the transmitted information bits $\{d_n\}$.
- In other words, decoding is performed by comparing the states of adjacent bits:
  - If the present bit is the same as the previous bit, a binary 0 is decoded.
  - Otherwise, the decoder's output is a binary 1.

Differential Coding (4)

- From the preceding example, suppose that the transmitted sequence 10110001 was received with no polarity inversion (the first 1 is the reference bit). The decoding performed at the receiver is given by:

Received sequence	$\tilde{e}_n$	1	0	1	1	0	0	0	1
Decoded sequence	$\tilde{d}_n$		1	1	0	1	0	0	1

- On the other hand, if a polarity inversion occurred, the decoding is given by:

Received sequence	$\tilde{e}_n$	0	1	0	0	1	1	1	0
Decoded sequence	$\tilde{d}_n$		1	1	0	1	0	0	1

- In both cases the sequence 1101001 was decoded correctly.

Differential Coding (5)

- Assume that the encoded bits are received without inversion. In other words, $\tilde{e}_n = e_n$ and $\tilde{e}_{n-1} = e_{n-1}$ implying that:

$$\begin{aligned}\tilde{d}_n &= e_n \oplus e_{n-1} \\ &= (d_n \oplus e_{n-1}) \oplus e_{n-1} = d_n \oplus \underbrace{(e_{n-1} \oplus e_{n-1})}_{=0} = d_n\end{aligned}$$

- Assume that the encoded bits are received with inversion. In other words, $\tilde{e}_n = \overline{e}_n$ and $\tilde{e}_{n-1} = \overline{e}_{n-1}$ implying that:

$$\begin{aligned}\tilde{d}_n &= \overline{e}_n \oplus \overline{e}_{n-1} \\ &= (\overline{d_n \oplus e_{n-1}}) \oplus \overline{e}_{n-1}\end{aligned}$$

  - First method:

$$\tilde{d}_n = (d_n \oplus \overline{e}_{n-1}) \oplus \overline{e}_{n-1} = d_n \oplus \underbrace{(\overline{e}_{n-1} \oplus \overline{e}_{n-1})}_{=0} = d_n$$

  - Second method:

$$\begin{aligned}\tilde{d}_n &= (\overline{d}_n \oplus e_{n-1}) \oplus \overline{e}_{n-1} \\ &= \overline{d}_n \oplus \underbrace{(e_{n-1} \oplus \overline{e}_{n-1})}_{=1} = \overline{d}_n \oplus 1 = d_n\end{aligned}$$

Regenerative Repeaters (1)

- When a digital signal is transmitted over a communication channel, it is attenuated, distorted and corrupted by noise.
- Consequently, for long lines, data can not be recovered unless repeaters are placed in cascade along the line.

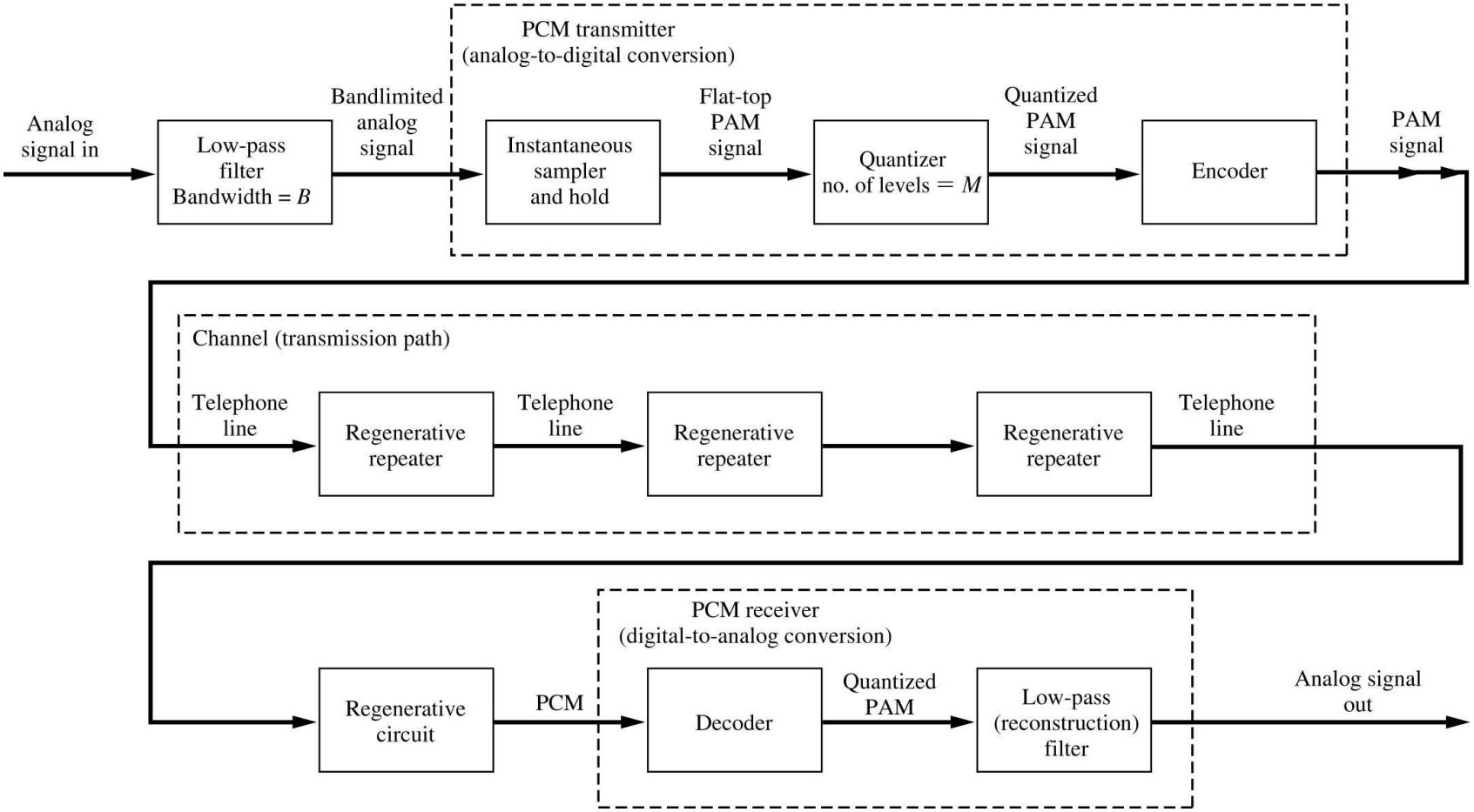

Regenerative Repeaters (2)

- Analog signals can only be amplified. The problem is that amplifiers will amplify the noise (that is added to the signal) as well.
- For digital signals, regenerative repeaters can be used. These repeaters perform nonlinear operations to regenerate a "clean" digital signal from the received noisy signal.

- **Amplification**

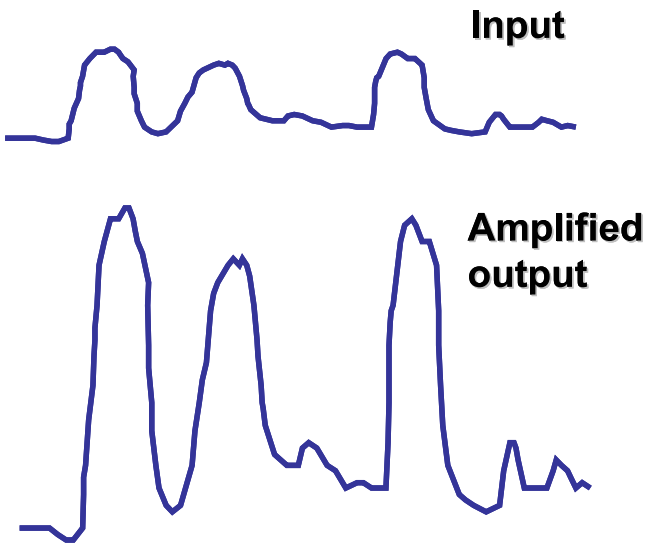

- **Regeneration**

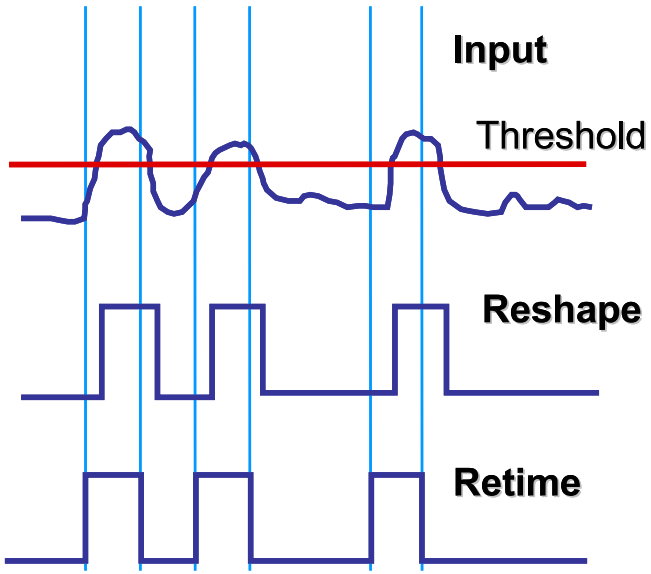

Regenerative Repeaters (3)

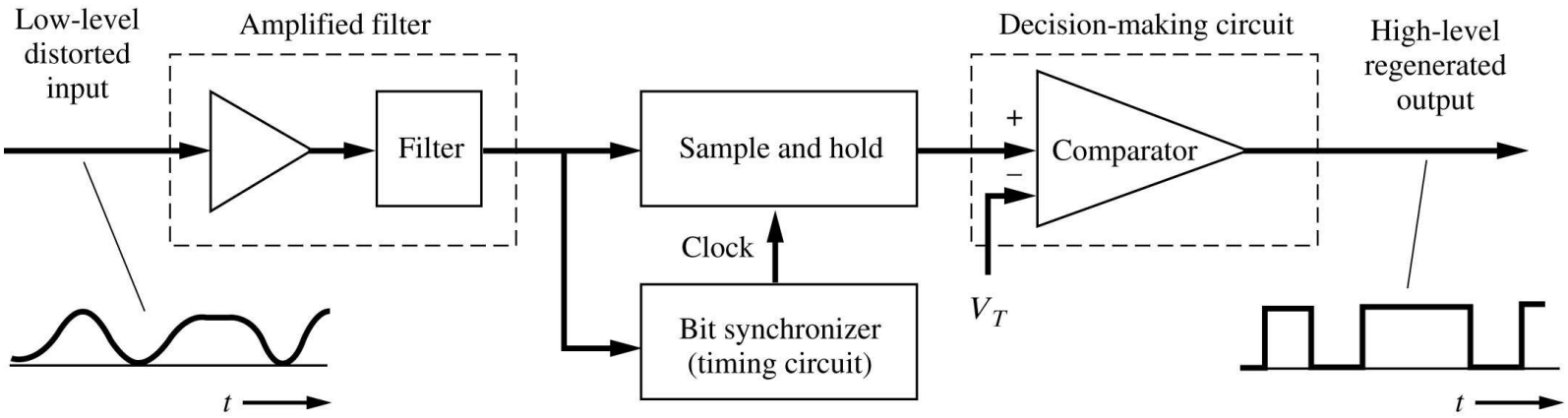

- The amplifier increases the amplitude of the low-level input signal while the filter reduces the level of noise in the signal.
- The bit synchronizer generates a clock signal at the desired frequency.
- The sample-and-hold block produces a sample value that is held constant for a bit interval T_b.
- The comparator compares the sample level with a threshold level V_T. If the sample level exceeds V_T, a digital signal corresponding to a binary 1 is produced. Otherwise, the output of the repeater corresponds to a binary 0.

Regenerative Repeaters (4)

- Consider the case where m repeaters (including the receiver end) are placed in cascade along a transmission line.
- Because of the presence of noise, erroneous decisions can be taken at each repeater. We assume that the probability of erroneous regeneration is the same for all repeaters and that it takes the value P_e.
- The probability that i (out of m) repeaters produce errors is:

$$P_i = \binom{m}{i} P_e^i (1 - P_e)^{m-i}$$

where:

- $\binom{m}{i} = \frac{m!}{i!(m-i)!}$ is the number of possible combinations of i repeaters out of the total number of m repeaters.
- P_e^i is the probability of i repeaters making wrong decision.
- In this case, the remaining $m - i$ repeaters make correct decisions. This happens with probability $(1 - P_e)^{m-i}$.

Regenerative Repeaters (5)

- There is a bit error at the output only when an odd number of repeaters produce errors. Consequently, the probability of error at the output of the m cascaded repeaters is:

$$
\begin{aligned}
P &= \sum_{i=1\ ,\ i\ \text{odd}}^{m} P_i \\
&= \sum_{i=1\ ,\ i\ \text{odd}}^{m} \binom{m}{i} P_e^i (1-P_e)^{m-i} \\
&= mP_e(1-P_e)^{m-1} + \frac{m(m-1)(m-2)}{3!} P_e^3 (1-P_e)^{m-3} + \cdots
\end{aligned}
$$

- Given that in general $P_e \ll 1$, then only the first term in the above series is significant. In other words, the probability of error can be approximated by $(1 - P_e \approx 1)$:

$$P \approx mP_e$$